Kamino 6 classic



- 6 kW
- Cast iron doors and top plate
- Enameled casing
- Cast iron grade
- Fireclay firebox
- Flue connection rear: 120 mm
- H x W x D: 709x444x367 mm
- For continouos use
- Fuel: wood, lignite

Wood Continouos use Brown coal

Certification	1.+2.Stufe 1.BImSchV
Heat output (kW)	6
Min-max heat output (kW)	3,5-7,1
Heat capacity (m3)	116
Flue gas quantity (g/s)	5,0
Flue gas temperature (C)	325
Air needs Pa	12
Size H x W x D (mm)	709x444x367
Fuel	wood, lignite
Firebox size W x D x H (mm)	350x200x320
Net weight (kg)	84,5

Wamsler SE
3104 Salgótarján, Hősök útja 49.
www.wamsler.hu

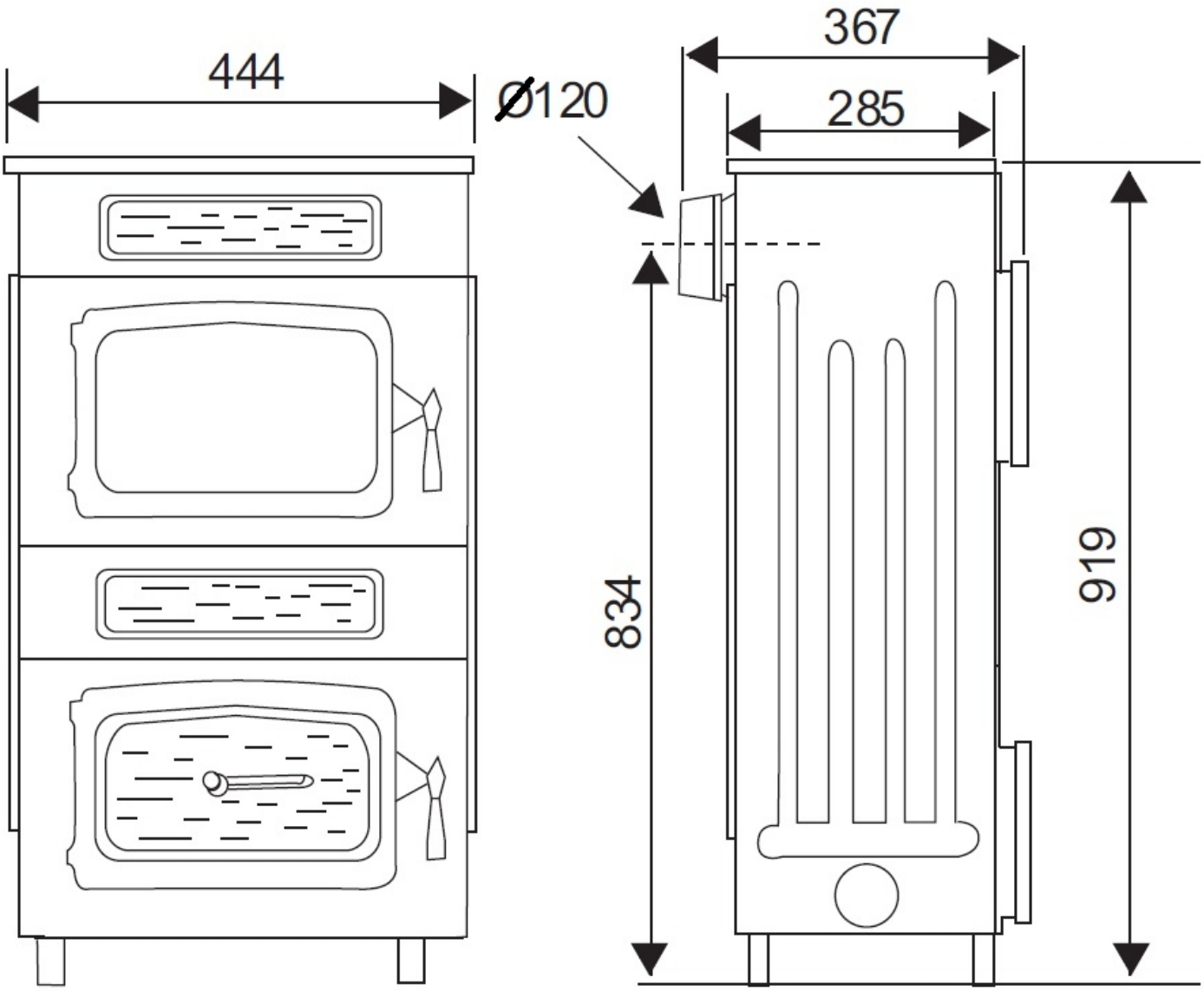

Wamsler SE
3100 Salgótarján, Rákóczi út 53-55
www.wamsler.hu